AIR PRODUCTS

Safetygram #43

Schumacher Bubbler Installation and Removal Procedures

Purpose

To define procedures for the safe installation and removal of Schumacher quartz bubblers.

Scope

Applies to all Schumacher breakseal and non-breakseal bubblers.

Responsibility

All people working with quartz bubblers are responsible for following the procedures outlined.

Safety

Handling quartz bubblers requires the use of cut-resistant gloves.

SAFETY: Before proceeding, read the material safety data sheet (MSDS) for the specific chemical being used and wear appropriate personal protective equipment. An MSDS is included with every Schumacher bubbler. Cut-resistant gloves **must** be worn when handling quartz bubblers. If you require additional assistance, please call your Schumacher sales representative or the factory directly at 760/931-9555 or 1-800-545-9242 (continental USA).

INSTALLATION: Refer to the recommended bubbler schematic or your delivery system equipment manual for specific installation and setup instructions.

> **CAUTION:** Use white mineral oil to fill the thermowell (Schumacher part number 1600-0001). Do not use water or volatile solvents, such as acetone or alcohol. Use of these or other liquids can create a serious safety hazard in bubblers containing water-reactive chemicals and may cause damage to the temperature probe.

Schumacher offers two types of bubblers: one with no breakseal and one with a diaphragm breakseal in the inlet and outlet stems. The bubblers have high-purity Teflon® valves attached to each stem. Breakseal bubbler valves are shipped in the open position (turned fully counterclockwise); no breakseal bubbler valves are shipped closed (turned fully clockwise). To gain access to the source chemical from either the breakseal or no breakseal bubbler, please follow the instructions given below. **NOTE:** The sequence of events is important.

1. Ensure that the incoming gas to the bubbler is off. **WARNING:** The incoming gas pressure to the bubbler must not exceed 15 psig, which will require the use of a two-stage pressure regulator. Downstream from the mass flow controller (MFC), there is to be a "safety," such as a relief valve or pressure switch, to be activated at 10 psig. Cut shrink-wrap around the valve if present. Do not move the valve handle.

2. Remove the plastic shipping plugs/caps from the valve fittings by unscrewing the hex nut/flare cap. This will back out the plug/cap until it is free from the fitting. DO NOT PULL ON THE SHIPPING PLUGS. This could break the bubbler stem. Save the shipping plugs for return shipment to Schumacher.

3. At 250 sccm turn on the gas with valves V2, V3, and V4 open (refer to bubbler plumbing schematic). Connect the incoming gas line (carrier gas) to the 1/4" Teflon valve. While inserting the gas line into the valve, carefully **support the valve to prevent the possibility of breaking the quartz stem.** Tighten the nut 1/8 of a turn past finger-tight.

4. Connect the outlet gas line (the gas line from the bubbler to the furnace) to the 3/8" Teflon valve. While inserting the gas line into the valve, carefully **support the valve to prevent the possibility of breaking the quartz stem.** Tighten the nut 1/8 of a turn past finger-tight.

Responsible Care®
Good Chemistry at Work

5. Close V5A and ensure that V5B stays closed (refer to bubbler plumbing schematic). After several minutes, (no more than 5 minutes), the MFC flow rate should read 0 if the connections are leak-tight. Open V5B.

6. **(Breakseal bubblers only.)** Break the outlet diaphragm by slowly turning the 3/8" Teflon valve handle clockwise while holding the valve body to prevent it from rotating on the stem. Breaking the diaphragm can be heard as well as felt and is usually accomplished at the third full turn of the valve handle.

7. Open the 3/8" outlet valve by slowly turning the valve handle counterclockwise. **Support the valve body to prevent it from rotating on the stem.** Open the 3/8" Teflon valve by continuing to turn the valve handle until it stops.

8. **Breakseal bubblers only:** Break the inlet diaphragm by slowly turning the 1/4" Teflon valve handle clockwise, while supporting the valve body to prevent it from rotating on the stem.

9. Open the 1/4" inlet valve by slowly turning the valve handle counterclockwise. **Support the valve body to prevent it from rotating on the stem.** Open the 1/4" Teflon valve by continuing to turn the valve handle until it stops.

10. Close valves V2 and V3 (refer to bubbler plumbing schematic) and turn down gas to 20 sccm. The bubbler is now fully operational.

REMOVAL: Follow the steps below for removing the bubbler. NOTE: The sequence of events are important.

1. Open valve 4 (refer to bubbler plumbing schematic), turn down the carrier gas to 20 sccm, close valve 2 first, and then close valve 3.

2. Close the 1/4" inlet valve by slowly turning the valve handle clockwise until it stops. **Support the valve body to prevent it from rotating on the stem.**

3. Close the 3/8" outlet valve by slowly turning the valve handle clockwise until it stops. **Support the valve body to prevent it from rotating on the stem.**

4. Disconnect the gas lines from each valve. While removing the gas lines, carefully support the valve body to prevent the possibility of breaking the quartz stem.

5. Reinsert the plastic shipping plugs/caps into each valve fitting and hand-tighten the nuts/caps.

6. The bubbler is now ready to package for return to Schumacher.

Figure 1

Bubbler

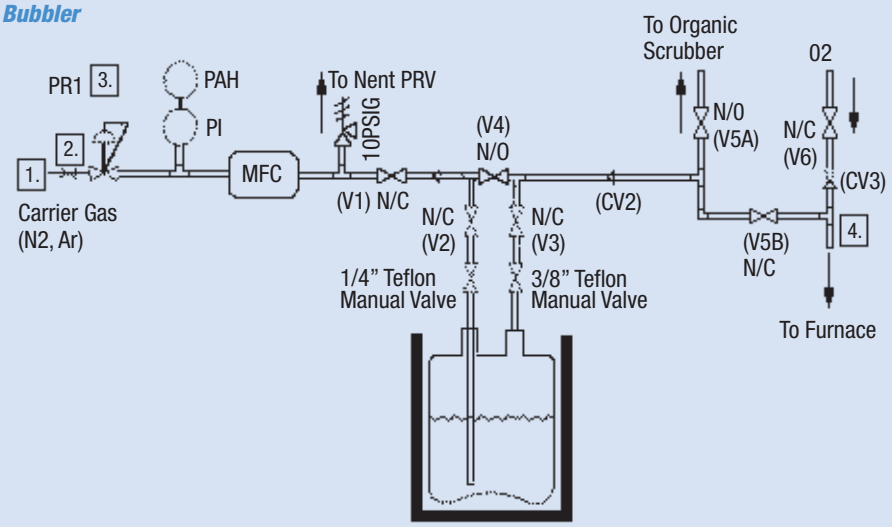

Figure 2

Recommended bubbler plumbing schematic

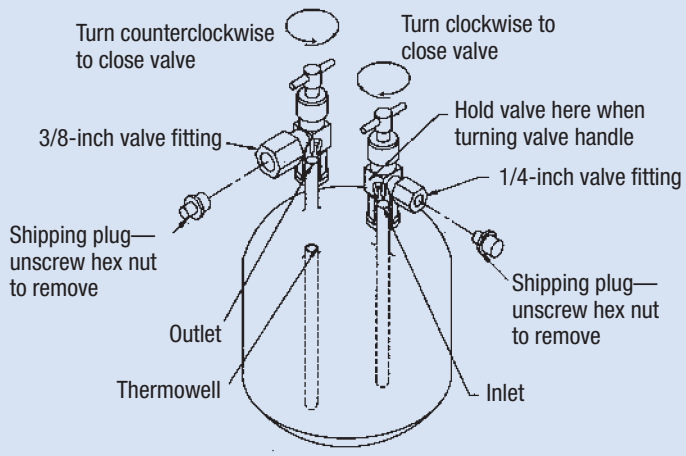

Emergency Response System

- Call: +1-800-523-9374
  (Continental U.S. and Puerto Rico)
- Call: +1-610-481-7711 (other locations)
- 24 hours a day, 7 days a week
- For assistance involving Air Products and Chemicals, Inc. products

Product Safety Information

- For MSDS, Safetygrams,
  and Product Safety Information
  www.airproducts.com/productsafety

Technical Information Center

- Call: +1-800-752-1597 (U.S.)
- Call: +1-610-481-8565 (other locations)
- Fax: +1-610-481-8690
- E-mail: gasinfo@airproducts.com
- Monday–Friday, 8:00 a.m.–5:00 p.m. EST

For More Information

Corporate Headquarters
Air Products and Chemicals, Inc.
7201 Hamilton Boulevard
Allentown, PA 18195-1501

tell me more
www.airproducts.com

© Air Products and Chemicals, Inc., 2004 (24205)